IAP INC. INDUSTRIAL AIR PRODUCTS

MEMBER

IAP INC.

INDUSTRIAL AIR PRODUCTS

Provides quality fan equipment with dependable service

Since 1974, IAP has supplied markets with quality industrial air moving equipment. From design to fabrication and delivery with ongoing service, IAP is a complete resource for fans, blowers and dampers.

IAP maintains a competitive edge with prompt order fulfillment, technologically superior engineering, excellent customer relations, custom design capabilities and quick turnaround time on rush orders. Innovative fan sizing and pricing software assist IAP's sales group's efficiency and thoroughness.

IAP has grown and changed over the years, as our customers' needs have changed. One thing that has remained constant is that IAP builds the highest quality industrial fan equipment on the market.

IAP has experienced sales engineers with offices throughout the world.

We're committed to providing impeccable service.

Friendly, knowledgeable and ready to go the extra mile, our staff members understand the customer always comes first.

We're dedicated to maintaining high-quality standards.

Personal responsibility, modern facilities, utilization of current technologies and rigorous checking assure high-quality products with lasting value.

We're focused on continued growth and prosperity.

By building the very best products, our customers, staff and community all prosper. It is a vision that extends beyond dollars to a way of working and living that brings pride to us all.

Visit us at www.iapfan.com for more information.

OEM FAN PRODUCTS

PRE-ENGINEERED FANS

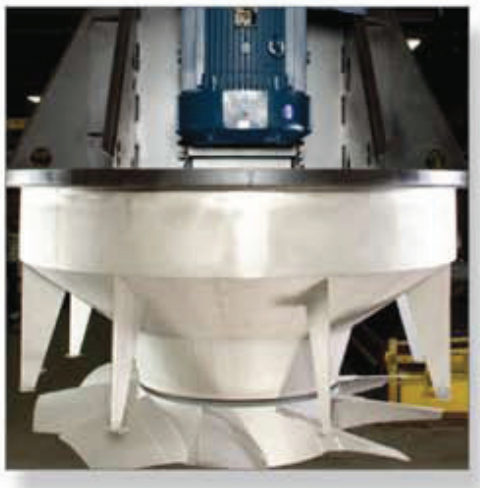

CUSTOM HEAVY DUTY FANS

QUALITY ENGINEERED, MANUFACTURED and TESTED FAN EQUIPMENT

Engineering capabilities include CAD, Solid Models and FEA. Each fan undergoes design review of drives, bearings and critical speed analysis.

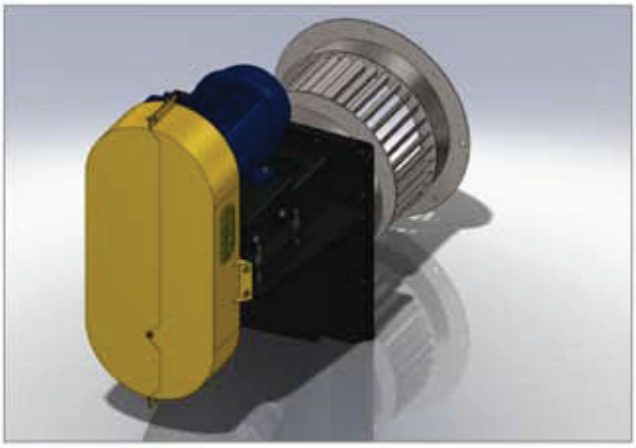

Personal responsibility, efficient production utilizing up-to-date equipment and technologies with rigorous checking assures high-quality products with lasting value.

Test lab:
Six-inch thick reinforced concrete chamber with calibrated nozzles, piezometer pressure taps and data acquisition. Utilized for performance check tests of production fans, product development, certified job specific performance tests and contract testing.

TABLE OF CONTENTS

FAN TYPES....5
BACKWARD INCLINED and AIRFOIL....8
BACKWARD CURVED....10
INDUSTRIAL EXHAUSTER....12
RADIAL TIP....14
HIGH PRESSURE....16
PRESSURE BLOWER....18
FORWARD CURVED....20
INLINE CENTRIFUGAL....22
TUBEAXIAL....24
VANEAXIAL....26
PLUG FANS....28
B-PACK DUST COLLECTOR FAN....30
DAMPERS....31
ACCESSORIES and SPECIAL CONSTRUCTION....32

STANDARD FANS BY WHEEL TYPE

TYPE B
BACKWARD INCLINED

MAXIMUM PRESSURE	MAXIMUM FLOW (ACFM)	MAXIMUM TEMPERATURE	STATIC EFFICIENCY	MATERIAL HANDLING
26 in. wg.	600–450,000 SWSI 1,200–800,000 DWDI	1,200 F	80%	none to dry and very light particulates

Wheels utilize heavy gauge, flat, backwardly inclined blades. Wheel performs to high efficiencies at relatively low tip speeds maintaining smooth quiet operation. Easily made of special alloys. Standard catalog sizes from 122 (12.25" Dia.) to 982 (98.25" Dia.) with custom sizes available.

TYPE A
AIRFOIL

24 in. wg.	1,600–375,000 SWSI 2,400–675,000 DWDI	1,000 F	82%	none to dry and very light particulates

Wheels utilize hollow double thickness airfoil, blade. Blade splits airflow creating a smooth flow over the entire blade surface. Similar to Type B but operating at slightly higher speeds while consuming less horsepower. Standard catalog sizes from 182 (18.25" Dia.) to 982 (98.25" Dia.), with custom sizes available.

TYPE XBC
BACKWARD CURVED

40 in. wg.	5000–300,000 SWSI 10,000–500,000 DWDI	1,200 F	84%	none to dry and very light particulates

Wheels utilize heavy gauge backward curved blades. Efficiency equal to or greater than backward inclined and airfoil with superior static pressure capability. Easily made of special alloys. Standard catalog sizes from 270 (27" Dia.) to 730 (73" Dia.), custom sizes available.

STANDARD FANS BY WHEEL TYPE

TYPE ORB
OPEN RADIAL BLADE

MAXIMUM PRESSURE	MAXIMUM FLOW (ACFM)	MAXIMUM TEMPERATURE	STATIC EFFICIENCY	MATERIAL HANDLING
40 in. wg.	200–175,000 SWSI	2,000 F	68%	moderate to heavy particulates

Wheels utilize heavy gauge and plate radial blades. Relatively low speeds for moderate pressures. Strong structural design. Perfectly suited for wear liners. Excellent elevated temperature capacity. Standard catalog sizes from 5 (8.75" Dia.) to 66 (114.75" Dia.) with custom sizes available.

TYPE P
MODIFIED RADIAL TIP

50 in. wg.	500–200,000 SWSI	1,600 F	72%	light to moderate particulates

Wheels utilize heavy gauge, curved, radial tip blades. Wheel performs to high efficiencies at relatively low tip speeds maintaining smooth quiet operation. Easily made of special alloys. Suitable for wear liners. Standard catalog sizes from 5 (8.75" Dia.) to 66 (114.75" Dia.) with custom sizes available.

TYPE WT
WOOL TRIM

40 in. wg.	300–175,000 SWSI	1,800 F	68%	moderate to heavy particulates

Wheels utilize heavy gauge and plate radial blades. Relatively low speeds for moderate pressures. Strong structural design. Wheel is shown with replaceable cutter blade option. Excellent elevated temperature capacity. Standard catalog sizes from 5 (8.75" Dia.) to 66 (114.75" Dia.) with custom sizes available.

TYPE XRT
RADIAL TIP

45 in. wg.	300–175,000 SWSI 12,000–400,000 DWDI	1,200 F	77%	light to moderate particulates

Wheels utilize heavy gauge, curved, radial tip blades. Wheel performs to higher efficiencies than standard radial tip fans utilizing a smooth spun inlet venturi to load the wheel and maintain smooth quiet operation. Easily made of special alloys. Suitable for wear liners. Standard catalog sizes from 270 (30.25" Dia.) to 730 (82" Dia.) with custom sizes available.

TYPE HP
HIGH PRESSURE

100 in. wg.	500–200,000 SWSI	1,200 F	77%	light to moderate particulates

Wheels utilize heavy gauge flat blades. Wheel develops high static pressures at high static efficiencies. Strongest structural design, suitable for wheel wear plates and easily made of special alloys. Standard catalog sizes from 25 (15" Dia.) to 200 (120" Dia.) with custom sizes available.

STANDARD FANS BY WHEEL TYPE

TYPE HPB
HIGH PRESSURE BLOWER

MAXIMUM PRESSURE	MAXIMUM FLOW (ACFM)	MAXIMUM TEMPERATURE	STATIC EFFICIENCY	MATERIAL HANDLING
30 in. wg. (std) 50 in. wg. (turbo)	100–1,400 (std) 350–2,200 (turbo)	250 F	75%	no

High strength aluminum alloy wheel construction. Wheel develops high static pressures at low volume flows. Efficiencies superior to conventional radial wheel designs. Standard catalog sizes from 167 (9.75" Dia.) to 450 (27" Dia.) with custom sizes available.

TYPE F
FORWARD CURVED

8 in. wg.	1,000–250,000 SWSI 1,200–400,000 DWDI	1,650 F	60%	no

Wheels utilize formed forward curved high strength blades. Moves large volumes of air at low speeds and low sound levels. Excellent elevated temperature capacity. Standard catalog sizes from 122 (12.25" Dia.) to 730 (73" Dia.) with custom sizes available.

TYPE ICA
INLINE CENTRIFUGAL

12 in. wg.	3,000–150,000 SWSI	850 F	70%	no

Hollow double thickness airfoil blades. Centrifugal wheel design in tube housing develops higher pressures than standard axial fans. Tube housing allows for continuous runs of duct work without elbow interruption. Standard catalog sizes from 182 (18.25" Dia.) to 730 (73" Dia.) with custom sizes available.

TYPE TAX
TUBEAXIAL

5 in. wg.	1,300–50,000 SWSI	300 F	60%	no

Propellers utilize cast aluminum blades and hub. Moves large volumes of air at lower pressures under low speeds with quiet operation. Adjustable pitch propeller allows for a wider spectrum of fan selections available for each application. Standard catalog sizes from 180 (18" Dia.) to 480 (48" Dia.) with custom sizes available.

TYPE VAX
VANEAXIAL

10 in. wg.	500–175,000 SWSI	850 F	65%	no

Aluminum alloy or steel propeller with heavy gauge aerodynamic curved blades. Produces large volumes of air at moderate pressures. Robust propeller in heavy gauge steel housing with stationary guide vanes allow for maximum efficiency and higher pressure capability than standard axial fans. Standard catalog sizes from 120 (12" Dia.) to 840 (84" Dia.) with custom sizes available.

BACKWARD INCLINED and AIRFOIL CENTRIFUGAL FANS

One of the most popular choices of IAP products, fulfilling many industrial performance requirements with high efficiencies at economical prices.

Backward Inclined (Type B) and Airfoil (Type A) fans utilize the same continuously welded heavy gauge housings, spun inlet cones and wheel shrouds, plate steel pedestals and structural steel bases. This attention to robust construction is coupled with engineered blade profiles and housing scrolls for highly efficient air movement at low to moderate pressures. Both fan types are available in single (SWSI) and double (DWDI) width and inlet.

ARRANGEMENT 3 SWSI ON UNITARY BASE

ARRANGEMENT 1 SWSI ON UNITARY BASE WITH NESTED VIV

TYPE B and A centrifugal fans are non-overloading and suited for a wide range of industrial applications which include: VENTILATION SUPPLY and RETURN AIR, CLEAN SIDE DUST COLLECTION, SPRAY DRYERS, COMBUSTION AIR SUPPLY, FILTRATION, POLLUTION CONTROL, and FUME EXHAUST.

amca CERTIFIED RATINGS

AIR PERFORMANCE

AIR MOVEMENT AND CONTROL ASSOCIATION INTERNATIONAL, INC. ®

Type B SWSI fans are licensed to bear the AMCA seal for Air Performance. Ratings are based on tests and procedures performed in accordance with AMCA publication 211 and comply with the AMCA certified ratings program.

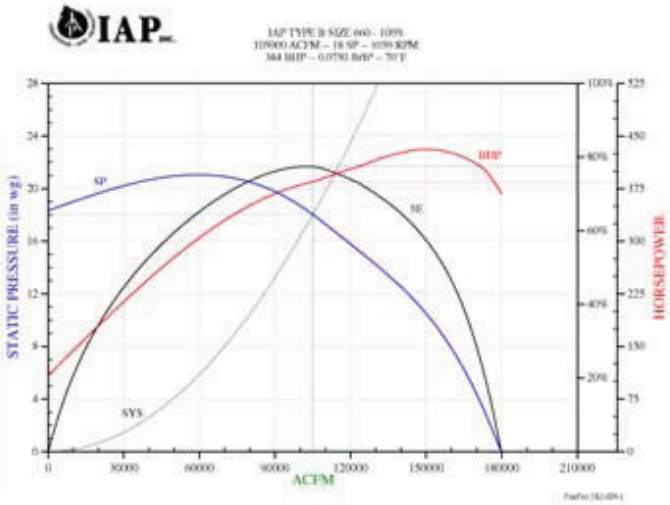

TYPE B

BOTH BACKWARD INCLINED AND AIRFOIL FANS ARE NON-OVERLOADING TO FREE DELIVERY.

Each wheel type has backward sloping blades that are recognized as the most efficient blade orientation in the industry. These highly efficient wheel designs reduce energy consumption and have significantly lower noise levels than other fan types.

TYPE A

Arrangement 1 size 365 (above, left) 36,000 ACFM dust collection fan on unitary base with motor and v-belt drive. Installed DWDI Tunnel Exhaust Fan (above, right) size 660 94,000 ACFM exhaust fan with inlet boxes, damper, actuator, and inlet and outlet expansion joints.

No matter how big or small, all IAP fans go through rigorous checks, continuous quality management, static and dynamic wheel balance, proper assembly alignment checks, drive train trim balance, and proper final coating mil thickness.

XBC - BACKWARD CURVED FANS

Highly efficient centrifugal fan, with superior static pressure capability.
Designed for longevity in clean industrial process applications.

Type XBC backward curved fans have single-thickness heavy gauge backward curved wheel blades. XBC fans utilize the same continuously welded heavy gauge housing configuration as the backward inclined and airfoil fans, but with heavier structural material and reinforcement to accommodate higher static pressure capabilities. All-welded fan construction braced with structural steel shapes reduces vibration and noise providing smooth operation. XBC fans are available in single (SWSI) and double (DWDI) width and inlet.

ARRANGEMENT 1 SWSI ON UNITARY BASE WITH INLET BOX AND DAMPER

TYPE XBC centrifugal fans are non-overloading and suited for a wide range of industrial applications which include: AIR POLLUTION CONTROL, BOILER APPLICATIONS, INDUSTRIAL PROCESS AIR, SPRAY DRYERS, COMBUSTION AIR SUPPLY, HEAT RECOVERY, WASTE TO ENERGY AND INCINERATION.

XBC backward curved fans combine the benefits of both the airfoil and backward inclined style fans. Backward inclined fans run at slower speeds to develop the same static pressure as airfoil fans, while airfoil fans are structurally stronger than flat bladed backwardly inclined fans. IAP combined the benefits of both in developing the XBC with single thickness die formed curved rigid blades in a wheel with a spun shroud that is coupled with an aerodynamically spun inlet cone for a fan with superior efficiency and high static pressure capability.

BACKWARD CURVED FANS ARE NON-OVERLOADING TO FREE DELIVERY DEVELOPING HIGH STATIC PRESSURES WITH SUPERIOR STATIC EFFICIENCY

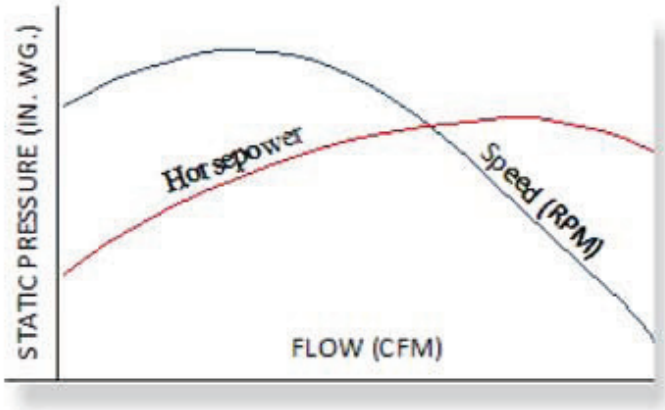

Fans with blades slanted away from the rotational direction of wheel travel, as the XBC has, are considered non-overloading. As the point of operation moves further down and to the right, on the fan speed curve, horsepower consumption peaks and then reduces to the point of WOV. Therefore, if system resistance (static pressure) drops, horsepower consumption changes only slightly or is reduced.

Arrangement 8 (left) direct drive fan. Fan shown includes an acoustical blanket to reduce radiated noise.

Arrangement 3 fan DWDI (below left) with downblast (180°) discharge. FEA (Finite Element Analysis) of the XBC wheel (below right), insures integrity and reliability of design.

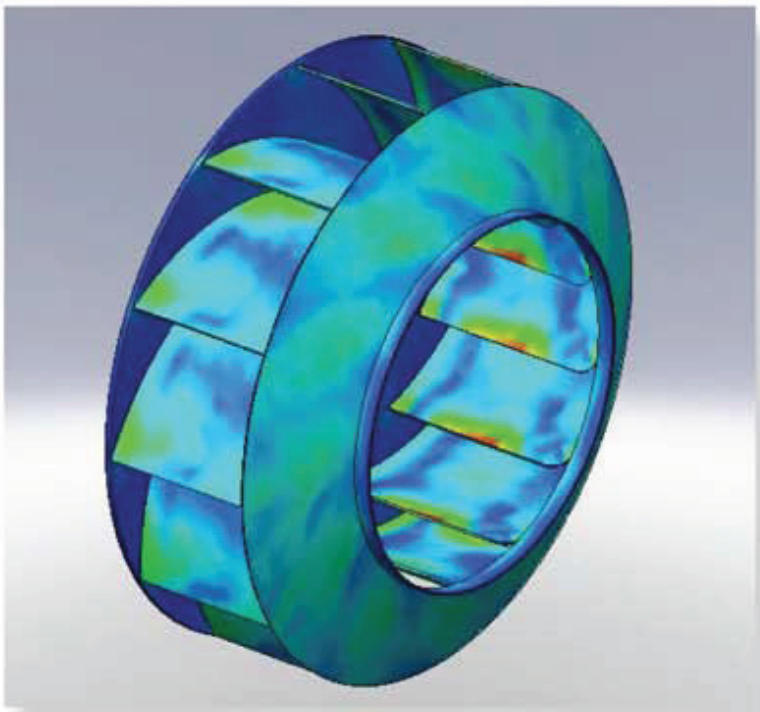

INDUSTRIAL EXHAUSTER FANS

One of the most common and versatile industrial fan choices on the market. Capable of meeting most medium to heavy-duty industrial applications. Three wheel choices are available to meet varying industrial applications.

Industrial Exhauster centrifugal fans develop higher pressures than traditional utility fans and are suited for a wide range of industrial applications which include: MATERIAL HANDLING, DUST COLLECTION, PNEUMATIC CONVEYING, SHAVING/TRIM CHOPPING and REMOVAL, SPRAY DRYERS, COMBUSTION AIR SUPPLY, FILTRATION, POLLUTION CONTROL, and FUME EXHAUST.

Industrial Exhauster Type P, ORB and WT fans utilize the same continuously welded heavy gauge housing, plate steel pedestals and structural steel bases. This attention to robust construction is coupled with engineered blade profiles and housing scrolls for highly efficient air movement at low to moderately high pressures. Each fan type is available in single-width single inlet (SWSI). Custom configurations are available for unique and special applications, as depicted above with a dual intake inlet box configuration.

IAP's Industrial Exhauster fans handle a wide array of industrial materials and harsh/corrosive airstreams. Three different wheel designs assure compatibility with each application's specific requirements. These three wheel designs handle everything from light dust to heavy granules, and are all well suited for wear liners.

ORB - Heavy Material Loading

P - Clean Air to Moderate Loading

WT - Long Shaving Material Loading

Stainless Steel ORB fan for dairy powder processing (left).

SPECIAL FEATURES:

Ground smooth and continuous airstream welds, polished interior, bead blast exterior, FDA approved white nitrile gaskets, white epoxy paint on mild steel base with FDA approved caulk between exterior skip welds.

STANDARD FEATURES:

Structural steel channel base, premium efficient TEFC motor, vented OSHA guards, pillow block bearings and heavy duty v-belt drive.

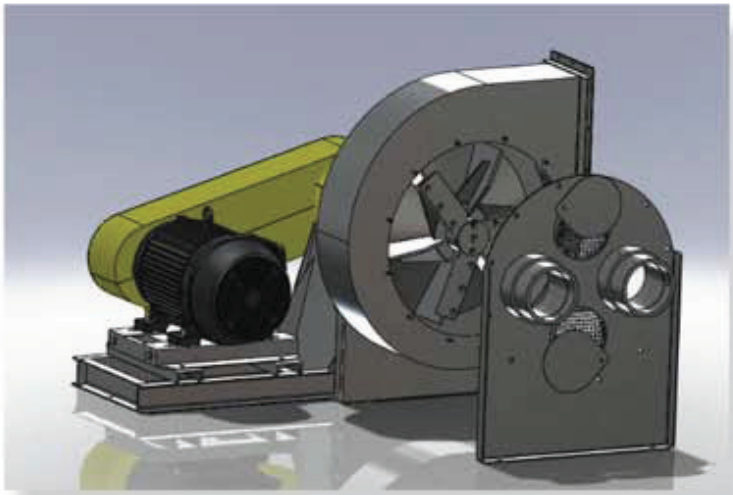

Chopper fan (right), rugged and durable for the pneumatic conveying industry. Industrial Exhauster fan fitted with radial blade wheel and three knives mounted to the edge of every other blade. The fan is designed for trim chopping and conveying applications in the paper, plastic and foil industries. Fan cuts trim ribbons to short lengths and conveys chopped trim to collectors, bailers or plant incinerators.

High temperature fan with plug and detachable housing

Standard catalog production fans

XRT - RADIAL TIP FANS

IAP's type XRT is a rugged multi-purpose centrifugal fan. The XRT fills the gap between Backward Inclined / Airfoil style and Industrial Exhauster fans. Higher pressure and material handling capability than Backward Inclined / Airfoil with higher efficiency and larger volume delivery over traditional Industrial Exhausters.

XRT - Radial Tip fans have continuously welded heavy gauge housings, highly efficient spun inlet cones and wheel shrouds, plate steel pedestals and structural steel bases. All fan housings are pie split as standard to facilitate ease of maintenance for wheel and shaft removal without disturbing duct work. Evase outlets are available to enhance static pressure capability. XRT fans are available in single (SWSI) and double (DWDI) width and inlet.

Type XRT centrifugal fans are suited for corrosive applications and elevated temperatures, and are well matched for a wide range of industrial applications which include: POLLUTION CONTROL, THERMAL OXIDATION, DRYING SYSTEMS, FLUID BED AERATION, DUST COLLECTION, PROCESS EXHAUST and RECOVERY AIR, INDUCED DRAFT BOILERS AND KILN EXHAUST.

Wheel shown left with spun wheel shroud and right with spun inlet cone. Both features create a smooth airflow entry pattern that improves efficiency while reducing noise levels.

XRT Radial Tip Fans are designed for efficient air movement of clean and particulate laden airstreams. XRT fans run slower than their Backward Inclined and Airfoil counterparts for a given static pressure rating. Specifically designed for heavy duty industrial applications in both direct and belt drive.

XRT wheels utilize heavy gauge radial tip self-cleaning blades. Wheel design produces moderate to high static pressures at typical industrial process flow rates. Well suited for wear liners and easily constructed of special alloys. Static efficiencies in excess of 75 percent. Catalog Static Pressures to 40 in. wg. with custom designs up to 50 in. wg.

Standard catalog XRT arrangement 1 fan (above left and right) with standard pie split housing, access door and vented shaft guard. Outlet evases (above center) available for static pressure regain and improved efficiency.

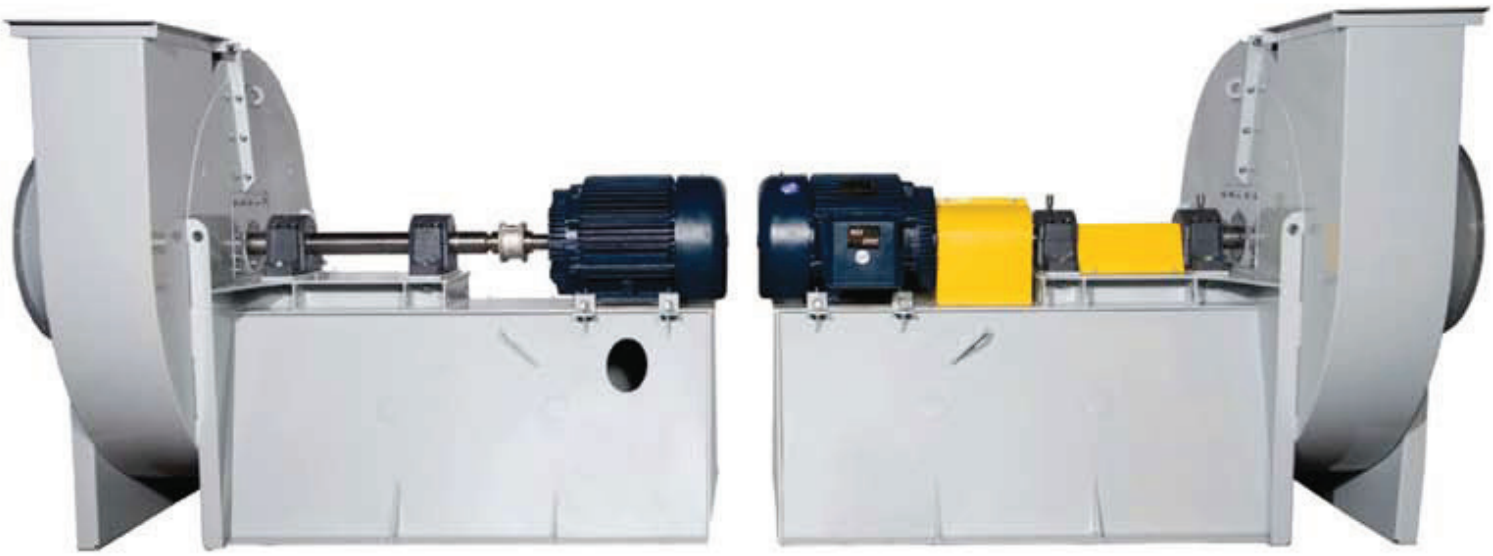

Mirror image arrangement 8 fans before and after coupling / shaft guard attachment and bearing sensor mounting.

HP - HIGH PRESSURE FANS

IAP's type HP is a heavy duty high pressure centrifugal fan. Specifically designed to handle low to moderate air volumes in industrial process systems with high resistance (static pressure). Capable of handling fly ash, cement dust and dry fibrous materials. Wheel blade profile provides maximum high pressure efficiencies while allowing stable performance from shut off to wide open volume.

HP fans have continuously welded heavy gauge and plate housings easily accommodated to ANSI inlet flange patterns as required, with plate steel pedestals and structural steel bases. Optional split housing design and all AMCA arrangements available to suit the end users needs. Built-in housing evase enhances static pressure capability. HP fans are available in single width, single inlet (SWSI) housing designs.

Type HP centrifugal fans are suited for high pressure process systems, corrosive applications and particulate loading applications, making them a solid match for a wide range of industrial applications which include: POLLUTION CONTROL, COMBUSTION AIR, DRYING SYSTEMS, FLUID BED AERATION, THERMAL OXIDATION, GLASS MANUFACTURING AND MATERIAL CONVEYING.

HP fans provide efficient air movement of clean and particulate-laden high pressure airstreams. Specifically designed for heavy duty industrial applications in both direct and belt drive.

HP wheels utilize slightly inclined radial heavy gauge self cleaning blades. Wheel design produces high static pressures at typical industrial process flow rates. Well suited for wear liners and easily constructed of special alloys. Static efficiencies in excess of 75 percent. Catalog Static Pressures to 80 in. wg. with custom designs up to 100 in. wg.

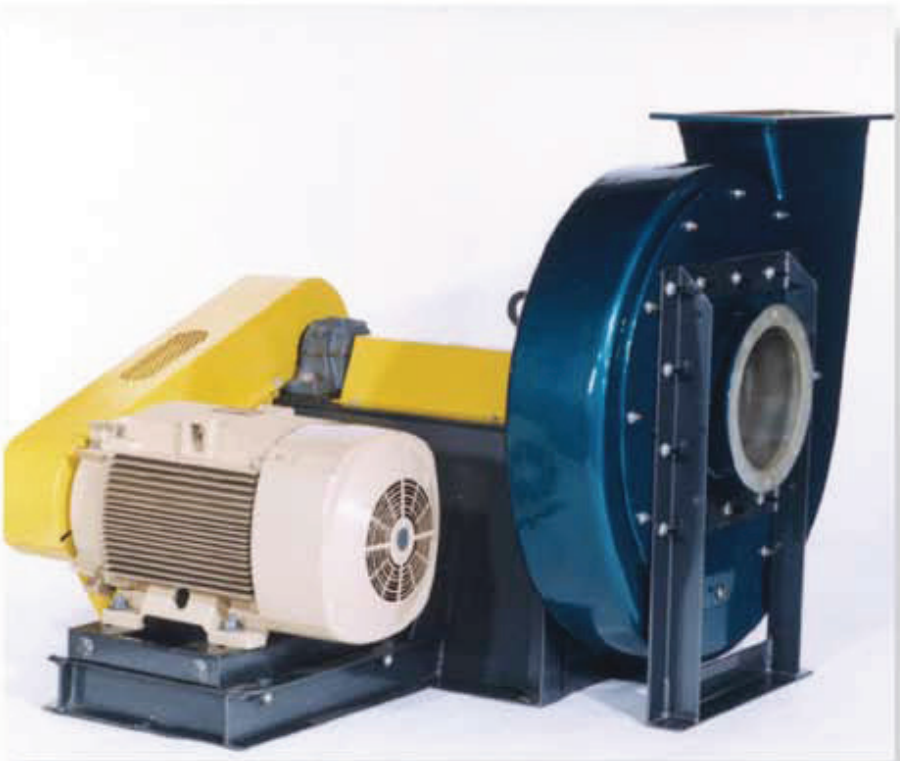

Standard catalog type HP arrangement 4 fan with pie split housing (left). Belt drive arrangement 9F (right).

HP fan with inertia base to be filled with concrete in the field. Inertia bases dampen vibration and startup torque due to the added mass and lower center of gravity they provide for the assembled unit.

HPB - HIGH PRESSURE BLOWERS

IAP's type HPB offers an array of fan sizes and wheel combinations to meet diverse industrial applications from combustion air to fume exhaust. The HPB is specifically designed to handle low to moderate air volumes at moderate to high static pressures. Stable performance from shut off to wide open volume eliminates surging.

Available in AMCA direct drive arrangement 4 (above left) and 8 (above right) as standard, and available in belt drive arrangement 9 for custom applications. HPB pressure blowers have eight standard housing sizes and 15 different wheel sizes available to match the end users required performance. High strength aluminum alloy wheels provide AMCA B spark resistance as standard. Heavy gauge continuously welded housings are rigidly braced to prevent "flexing" at high pressures. All wheels are statically and dynamically balanced prior to assembly and all assembled units are final trim balanced at operating speed prior to shipment.

Type HPB pressure blowers are suited for high pressure industrial process applications. All applications can be handled in induced or forced draft configurations. A wide range of available modifications and accessories make the HPB suitable for industrial systems which include: COMBUSTION AIR, FURNACE BLOWERS, AIR KNIVES, MOISTURE BLOW-OFF, COOLING SYSTEMS, GLASS MANUFACTURING AND FUME EXHAUST.

HPB blowers provide efficient air movement of clean air. This is accomplished using combinations of radial blade wheels in aerodynamic housings providing superior efficiency over traditional radial blade fan designs. Blower housings are reversible and rotatable in 45-degree increments.

Catalog Static Pressures to 30 in. wg. (Standard) and 50 in. wg. (TURBO). Standard HPB wheels are aluminum alloy with narrow radial blades. HPB TURBO wheels are riveted aluminum alloy construction with a shroud to achieve higher static pressure capability. TURBO wheels are used for wheel diameters greater than 20 inches.

Inlet Filter Option: Fiber wafer filter media supported by perforated metal inner and outer bodies. Furnished standard with connection rod and end cap. Also available with a protective weather cover/hood.

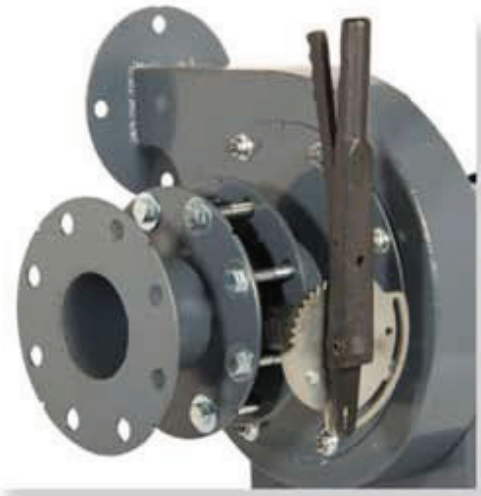

Damper Option: Single blade valve dampers are available for inlet or discharge mounting. Valve dampers are constructed of heavy gauge steel and supplied with manual control lever and locking quadrant.

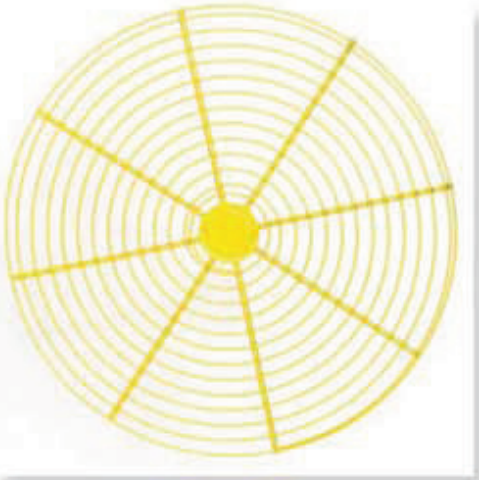

Inlet screen guards available for inlets or outlets open to the atmosphere.

Standard continuously welded flanges with ANSI 125/150 pipe flange bolt patterns allow for ready connection to standard piping.

F - FORWARD CURVED FANS

IAP's type F forward curve high air volume fan is most commonly used in elevated temperature applications requiring circulation of large volumes of air at low pressures. Excellent low speed fan choice for application as an air kit or plug fan in ovens, dryers and furnaces.

Plug fan for an oven application with 316 stainless steel wheel and round insulated plug.

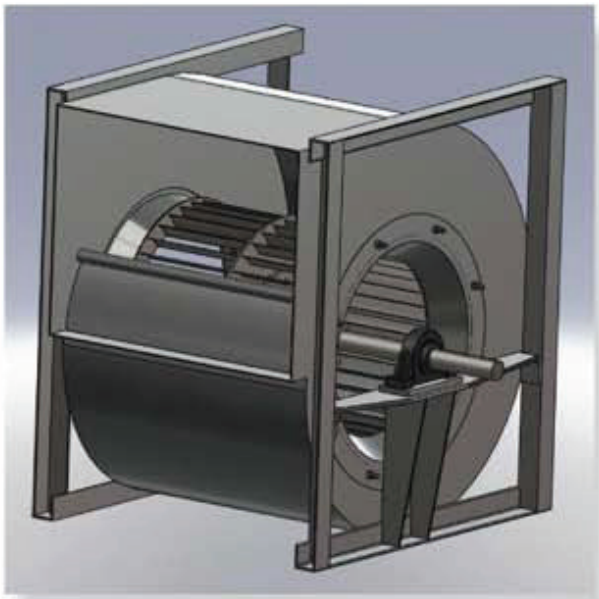

General ventilation air handling design for use in a plenum or out of a plenum with ductwork.

Frequently constructed of stainless steel and nickel alloys for operation at elevated temperatures, type F fans, are also well suited for general industrial ventilation at lower temperatures. When supplied in a standard centrifugal fan configuration, type F fans, utilize the same continuously welded heavy gauge housings and steel plate pedestals as the Backward Inclined and airfoil fans. Most common AMCA arrangements are 3 DWDI for general ventilation or air kits and 9 SWSI for plug applications. All wheels are statically and dynamically balanced prior to assembly and all assembled units are final trim balanced at operating speed.

Type F wheel characteristics include even airflow distribution, relatively slow fan speeds and low noise levels. While an excellent large volume mover, type F fans should not be used in applications where materials can build up in the valley/curve of the blade and cause imbalance.

Low speed, quiet operation and large volume capability make the type F industrial fan well suited for applications in general ventilation air handlers and high temperature clean air industrial systems.

A wide range of available modifications and accessories make the type F suitable for industrial applications which include: GENERAL VENTILATION, COOLING and HEATING SYSTEMS, BATCH OVENS, DRYERS AND CURING FURNACES.

Available in arrangement 3 DWDI air kit as a parts package. Parts packages can include wheel(s), inlet cones, housing(s), shaft, bearings and bearing cooling wheels. Air kit packages can be custom designed to meet the user's precise configuration by utilizing wider and narrower wheels and housings.

Available in plug arrangements with option for either a square or round insulated plug, with or without a housing.

Custom is our standard! Doing the extra little things to insure extended equipment life and optimum performance.

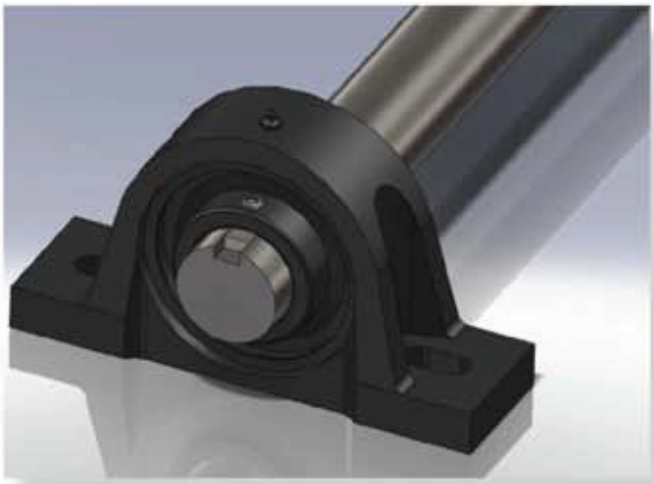

Air kit bearings typically mount outside of the furnace or oven to keep them out of the airstream. Elevated furnace temperatures may still result in thermal expansion and axial growth of the fan shaft which can cause binding of the expansion bearing. To overcome this problem; IAP has designed a unique modified high temperature expansion bearing collar with set screw and key to allow for excessive thermal shaft expansion. The configuration allows the shaft to slide axially in the bearing collar but remain fixed in the radial direction (depicted left).

CAUTION NOTE: Placement of burners should not be in close proximity to fan inlet(s), as this could produce temperature spikes in the fan airstream and premature fan failure.

ICA - INLINE CENTRIFUGAL AIRFOIL FANS

The type ICA is an inline fan with a centrifugal wheel. ICA fans combine the efficiency of a centrifugal airfoil wheel with the compactness of a tubular fan housing; saving space while reducing horsepower consumption and operating costs.

ICA fans incorporate continuously welded heavy gauge housings, smooth venturi spun inlet cones and highly efficient wheels with airfoil blades and aerodynamic spun shrouds. Motor supports are comprised of a rigid formed steel plate with adjustable motor mounting plate for belt tensioning. Rigidly constructed bearing and shaft tube support is provided with a removable end plate for bearing, shaft and sheave access.

ICA fans are non-overloading and suited for a wide range of clean air industrial applications which include: VENTILATION SUPPLY and RETURN AIR, EXHAUST AIR, HEATING, VENTILATING and COOLING.

The design and construction of the ICA fan family allows for highly efficient air movement with higher pressure capability than traditional axial and propeller inline fans.

The ICA fan is also available in a vertical stack or roof mount with or without curb cap, wind band and butterfly back draft outlet damper.

Fan above is arrangement 4 direct drive with wheel mounted directly to motor shaft. Motor conduit box is on opposite side (not shown).

A compact, efficient and quiet inline fan for clean air applications that can be inserted without complicated elbows or square to round duct transitions.

ICA wheels incorporate a back plate with a smaller diameter than the front shroud coupled with tapered blades. This feature allows for smoother airflow in the fan housing as air coming off the blade tips is pre-angled in the direction of flow eliminating a 90-degree airflow turn at the blade tip required by other units on the market. Benefits of this feature include elimination of turbulence, improved efficiency and lower noise levels than competitors designs.

High temperature applications up to 850 F incorporate an insulated bearing tube with auxiliary cooling blower (shown lower right side of fan). Also shown here with vented motor weather cover.

All units come standard with extended lube lines for easy access to grease zerks.

Versatile mounting in horizontal, vertical and angular positions utilizing mounting brackets, feet and collars allow for simple trouble-free installations. ICA fans are available in AMCA arrangement 9 with adjustable motor shelf (below left), arrangement 9F with unitary base for larger horsepower applications (below right) and arrangement 4 direct drive for specific speed applications.

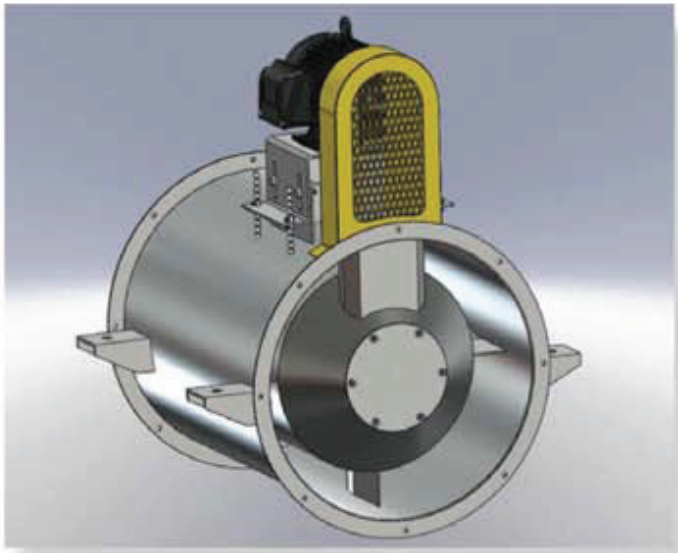

TAX - TUBEAXIAL FANS

The type TAX is a duct fan designed and constructed for efficient air movement and reliable operation in industrial ventilation and processes applications. TAX fans have factory adjustable blades to specifically match performance requirements and optimize efficiency.

TAX fans are quiet, low speed axial fans designed to handle large volumes of air at low to moderate pressures. Well suited for heavy continuous duty commercial and industrial applications which include: VENTILATION SUPPLY and RETURN AIR, HEAT, FUME and SMOKE EXHAUST, HEATING, VENTILATING, COOLING AND PROCESS DRYING.

TAX fans incorporate continuously welded heavy gauge outer casings with drilled flanges. Motor supports are comprised of rigid formed steel plate with adjustable motor mounting plate for belt tensioning. The rigidly constructed bearing and shaft internal mounting plates provide stable drive train support and reinforce the fan casing body.

Vertical mount roof exhaust fan with curb cap and wind band with built in butterfly outlet damper (shown right). Available in AMCA arrangements 4 and 9 with a motor weather cover feature available for arrangement 9 belt drive. Mounting hole locations in curb cap are designed to match standard roof curb holes. Also available for vertical mounting in a stack without wind band and curb cap.

A compact, efficient and quiet axial fan for clean air applications that can be configured and accessorized to meet each application's needs.

TAX props have aluminum blades, cast aluminum hub with a taper lock bushing. Factory adjustable pitch blades allow maximization of efficiency and the ability to meet specific fan speeds for each given performance. Additional props with 8, 12 and 16 blades are also available to further optimize efficiency on custom applications.

TAX propeller blades are cast aluminum airfoil as standard (right). Glass reinforced nylon (GRN) blades (left) are also available where specified. Standard cast aluminum props are good to 250 F with glass reinforced nylon (GRN) props good to 300 F.

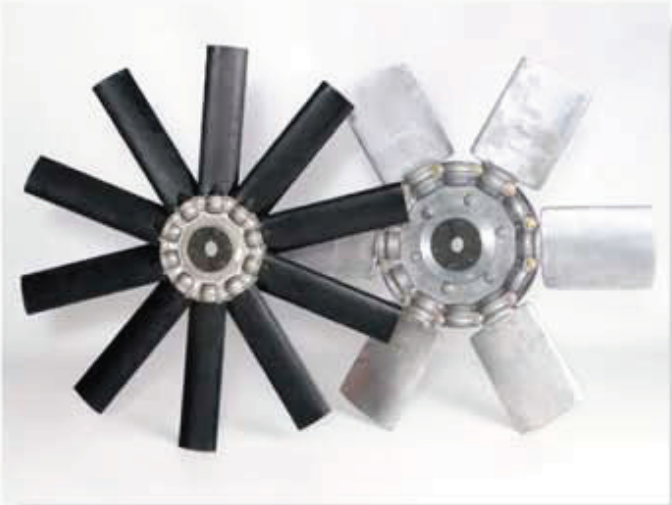

Type TAX with optional inlet and discharge bells.

All units come standard with extended lube lines for easy access to grease zerks.

TAX fans are available in AMCA arrangement 9 with adjustable motor shelf and arrangement 4 direct drive. Versatile mounting in horizontal, vertical and angular positions with mounting brackets, feet and collars available for each orientation allow for ease of installation.

VAX - VANEAXIAL FANS

The type VAX (vaneaxial) fan is defined by its name; an axial fan with stationary straightening guide vanes on the discharge side of the propeller. Design allows for a compact inline installation with high static pressure capabilities (relative to other axial fans) of up to 10 in. wg.

The VAX fans sturdy and rugged industrial construction make them well suited for heavy, continuous duty industrial applications which include: VENTILATION SUPPLY and RETURN AIR, HEAT, FUME and SMOKE EXHAUST, HEATING, VENTILATING, COOLING AND PROCESS DRYING.

VAX fans incorporate one piece heavy gauge rolled steel inner and outer casings. Outer casings form a round smooth surface for efficient air passage and incorporate drilled flanges. The heavy gauge inner body drivetrain casing is supported by formed steel guide vanes. Motor supports are comprised of rigid formed steel plate with four corner-adjustable motor table to insure proper belt tensioning and alignment, which results in maximum belt and bearing life.

Offered in AMCA arrangement 4 (direct drive not show) and 9 (above). Standard belt guard for arrangement 9 (left) with a motor and drive weather cover feature optionally available (below).

Aerodynamic die-formed blades coupled with stationary guide vanes eliminate turbulence and recover rotational energy for improved efficiency, enhanced pressure capability and reduced noise.

Aluminum props are good to 250 F with mild and stainless steel impellers available for temperatures as high as 850 F. The VAX prop's steep characteristic curve extends the normal selection range to larger volumes without significant loss in pressure capability.

All units come standard with extended lube lines for easy access to grease zerks.

Versatile mounting in horizontal (above, middle), vertical (above, right) and angular positions with mounting brackets, feet and collars optionally available for each orientation to allow for ease of installation. Vertical configurations incorporate axial locking mechanisms for bearings and propeller.

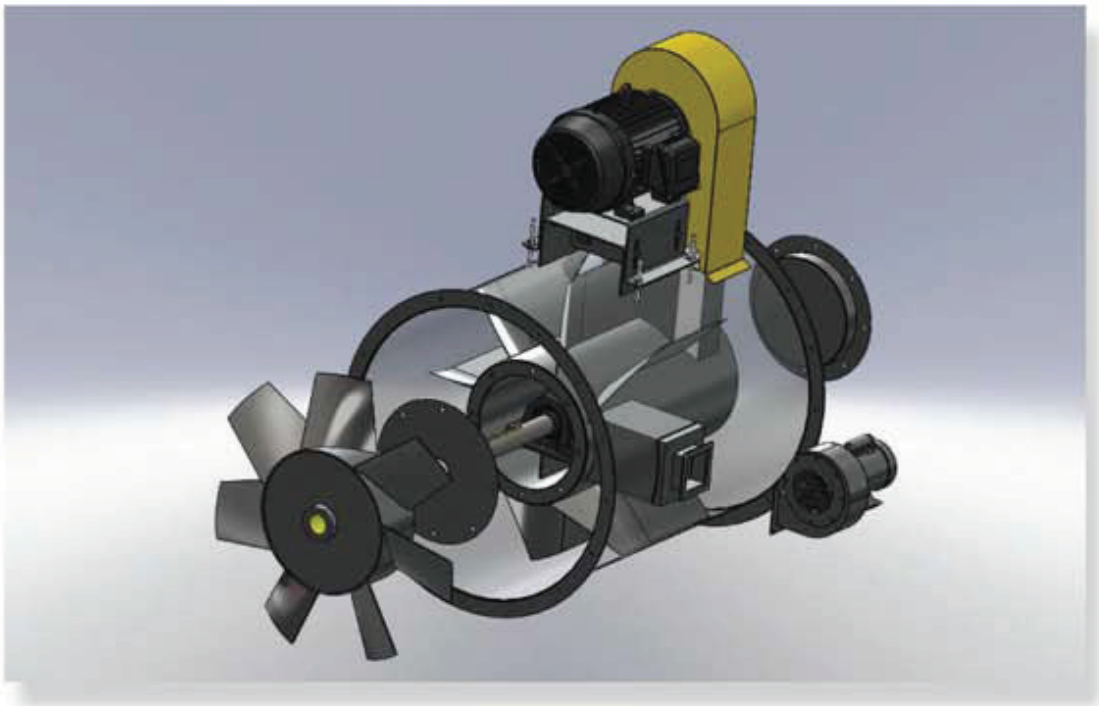

Sealed belt tunnel and bearing tube protect the drivetrain assembly from contaminants in the airstream. The belt tunnel is accessible beneath the belt guard and bearing tube is accessible through inner body end tube caps. Guide vanes are welded to both the inner and outer body the tubes providing rigidity and support that minimizes vibration and casing noise. For high temperature designs the bearing tube can be modified; VAX fan shown above has insulated bearing tube and belt tunnel along with an auxiliary cooling blower.

BPG, FPG, OPG and XPG - PLUG FANS

A versatile and compact fan design solution for circulating air and maintaining a constant temperature gradient. IAP Plug Fans are a durable, efficient and economic choice for a wide range of industrial applications which include OVENS, FURNACES, KILNS, DRYERS, SPACE HEATERS, SPRAY BOOTHS and AIR CURTAINS.

Below left and right: 84" diameter XPG fan with insulated plug for a curing furnace.

- Capacities to 300,000 ACFM with static pressures to 20 in. wg.
- A space-saving solution for horizontal or vertical mounting.
- Elevated temperature construction from standard 300 F to 1800 F with upgrade packages for isolation and alloys of construction.

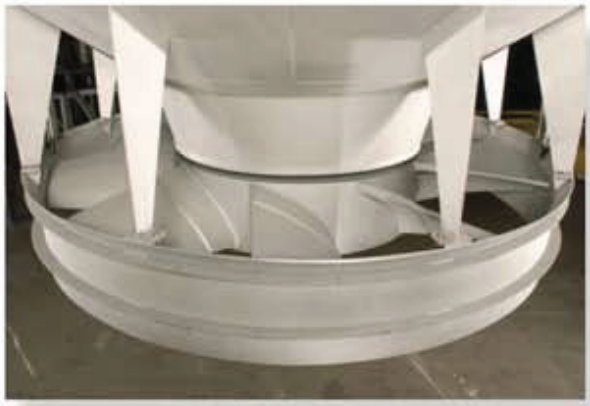

PLUG FANS BY WHEEL TYPE

Four wheel designs to choose from: BPG with backward inclined wheel (far left) for highest efficiency selections. FPG with forward curved wheel (center left) for moving large capacities at low speeds. OPG with open radial blade (center right) for severe, high temperature applications offer the strongest structural design. XPG with axial prop (far right) for moving large capacities in severe, high temperature applications.

Most applications utilize the system plenum as the fan housing which reduces space requirements and ductwork connections, however, fan housings are available as an option to any IAP plug fan.

Adjustable motor base, removable guards and readily accessible bearings reduce maintenance time.

Motor and drive assembly are mounted to a formed steel plate plug panel with flanges and cross-frame bracing for strength and flatness. Plug panel is pre-drilled and all units are factory assembled and balanced ready to "plug" into your supply, exhaust or recirculation system.

Unit shown to the left is a floor mount option with round plug and detachable housing.

Units shown above without inlet cones. Inlet cones for type BPG and FPG plug fans ship loose for mounting to the inside of the plenum/system wall or can be integrally mounted to the plug panel as an option.

B-PACK - DUST COLLECTOR FANS

B-PACK, direct drive arrangement 4 fan designed for top and side mounting on dust collectors. Fan package includes high efficient type B Backward Inclined non-overloading wheel and premium efficiency motor.

Seven fan sizes to accommodate dust collector manufacturers' standard units. Fan handles relatively clean air at moderate pressures. Airflow to 12,000 ACFM and static pressures to 20 in. wg. B-PACK fans have reinforced inlet side sheet and inlet flange for mounting upright on their inlet side or horizontal on the side of a collector.

Backward Inclined steel wheel with spark resistant aluminum wheel optional.

Features:

- Premium efficiency motor is standard with explosion-proof and severe duty motors available as options.
- No belts to contend with; virtually maintenance free with wheel mounted directly to motor shaft.
- Lifting lugs are standard and positioned for convenient balanced hoisting during installation.
- Designed for temperatures up to 180 F.
- Heavy gauge welded steel wheel, continuously welded re-enforced housing with precision trim balance prior to shipment eliminates vibration and insures a long lasting, trouble-free unit.

Options and Accessories:

- Bolted drive side cover plate option available for wheel and motor removal as a unit without disconnecting entire unit from the collector.
- Outlet screen for unducted outlet
- Outlet flow control damper
- Outlet silencer
- Spark resistant construction

INDUSTRIAL DAMPERS

Flow control, isolation and back draft dampers available in rectangular and round. IAP dampers are manufactured with formed sheet and plate construction as standard and available with structural channel frames to meet more severe and demanding industrial applications.

Standard duty dampers; round external variable inlet vane (VIV) damper (left) and rectangular box damper (right). IAP engineers each damper to meet your specific application's needs. Continuously welded drilled flange patterns to match your equipment and ductwork. Damper shafts are supported using re-greasable flange block ball bearings and self lubricating sleeve bearings for VIV center supports.

Opposed bladed outlet damper, below left. Parallel bladed low leakage damper with jam and blade seals, below right.

Industrial duty blade linkages and self aligning rod ends insure frictionless blade action with no backlash. Dampers come standard with manual control arms and are available with electric and pneumatic actuators. Shaft seals, spring jam seals and blade edge contact seals are optionally available for minimal leakage requirements.

Stainless steel external VIV with cantilevered blades and insulated casing for a high temperature application, below left. Nested VIV built into the fan's inlet cone, below center. Large external VIV, below right.

Dependable operation, low maintenance and long-lasting service for demanding applications.

ACCESSORIES

Additional features to augment the function, monitoring, service and maintenance of IAP fan equipment.

OSHA guards and weather covers

Silencers

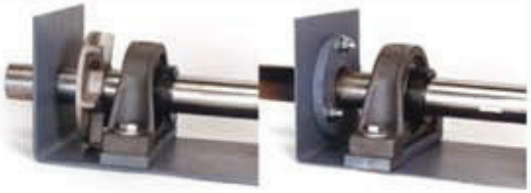

Cooling wheels and shaft seals

Acoustical blankets

Unitary channel bases

Access doors and drains

Molded expansion joints

Wire screens

Temperature and vibration sensors

Vibration isolators

Split housings

Inlet boxes

SPECIAL CONSTRUCTION

- ALLOYS
- LINERS
- SPLITS
- HIGH TEMPERATURE
- SWINGOUT
- SPARK RESISTANCE
- INSULATION
- DAIRY

Inlet box with built in sound attenuation

Pie split housing to remove wheel without disturbing ductwork

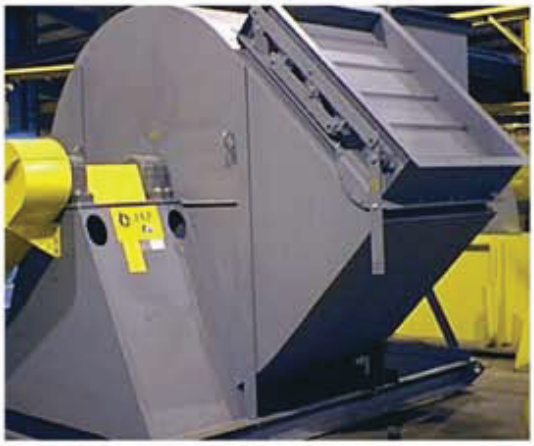

Double wall clad housing, above and below

Mine shaft pressurization (above); single skid mounted inlet filter box, silencer, blower assembly, disconnect and power supply drive. Multiple units, shown below, during factory assembly.

Cr-Carbide liners

High-temperature construction with spikes for field insulation, also shown with raised access door

Swingout designs

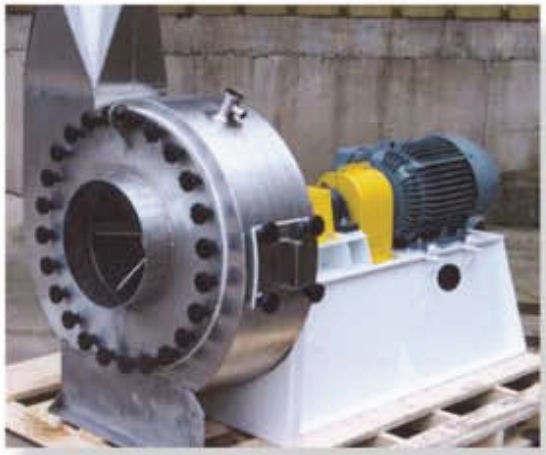

Stainless steel spray dryer dairy fan

IAP Inc. ... Dependable equipment for demanding applications

INDUSTRIAL FAN EQUIPMENT

BACKWARD INCLINED | AIRFOIL | BACKWARD CURVED | INDUSTRIAL EXHAUSTER | RADIAL TIP | HIGH PRESSURE | PRESSURE BLOWER | FORWARD CURVED | INLINE CENTRIFUGAL | TUBEAXIAL | VANEAXIAL | PLUG FANS | DUST COLLECTOR FANS | DAMPERS | SILENCERS | ACCESSORIES

INDUSTRIAL AIR PRODUCTS

FACTORY: W6905 Paradise Lane Phillips, WI 54555 T: 715-339-3024

SALES: St. Paul, MN T: 651-714-2500 **EMAIL:** sales@iapfan.com

WEBSITE: www.iapfan.com

CAT NO. AP-1 2013